Institute of Electrical and Electronics Engineers (IEEE)

Robotics & Automation Society

Egypt Chapter

Building the Robot Body

Design , implement, Motor selection , motor control

Objectives

- Draw using CAD or use meccano to make the design
- Battery connections
- Driving technique
- Motor selection
- Control DC motor using Relay and switch
- Control DC motor using H-bridge and switch
- Introduce the Idea of microcontroller and H-bridge controlling DC motor

Recommended components

- Wires
- Batteries
- Resistances
- Breadboard
- Motor (6 , 9 0r 12 volts)

Recommended tools

- computer
- one of the following programs
- mouse (optional) it will be easier to draw with a mouse not the tap of the laptop

CAD

Google sketch up

- Free and open source
- Easy to deal with

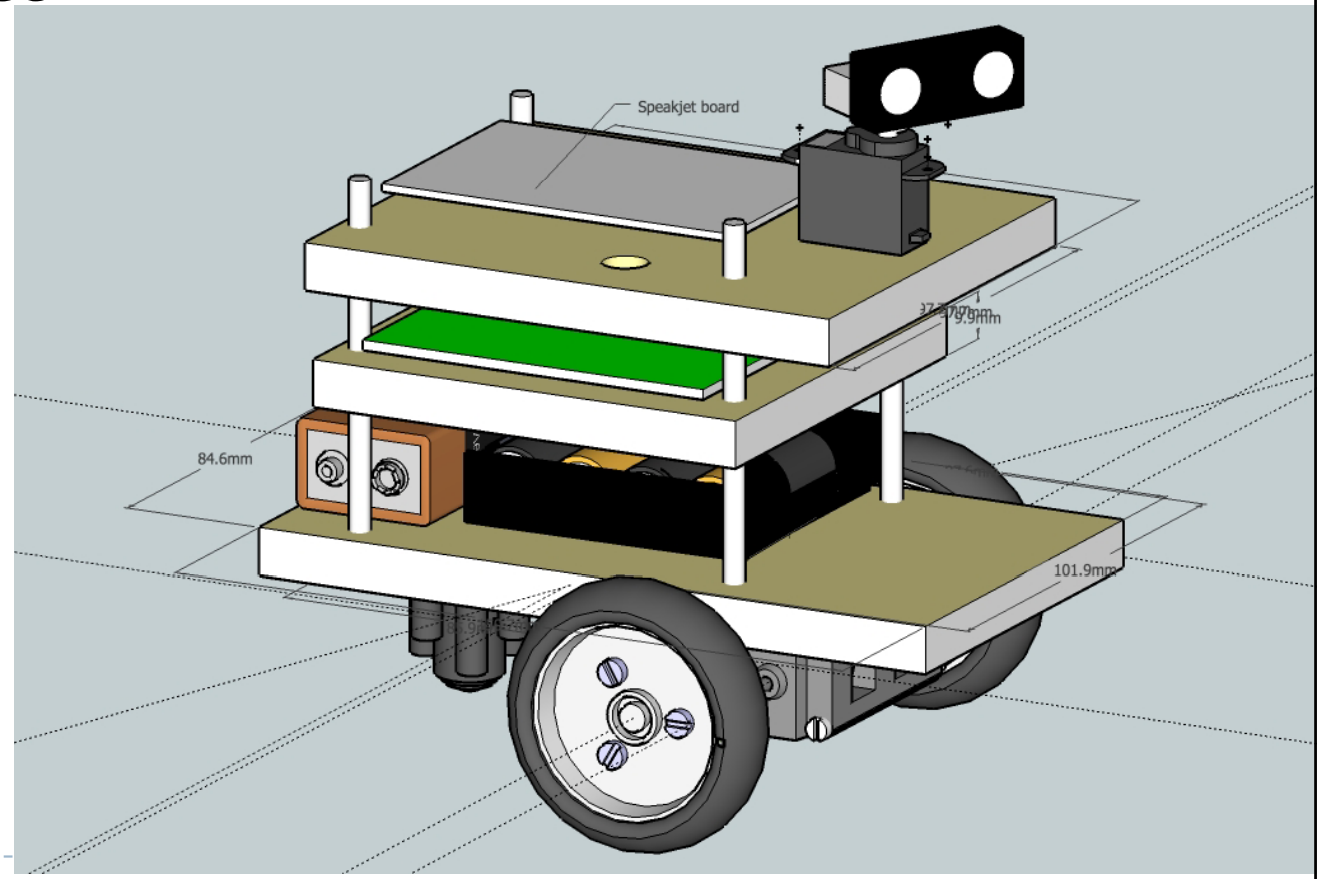

Solidworks

- Professional
- Can do simulations , animated drawings
- There is a student edition that can be given to any one with .EDU mail .

Autocad

- Professional
- Can’t do simulation on its own but need additional program like (inventor) also made by autodesk .
- Has many aiding material online (Google and YouTube) .

Mechanical Construction

Meccano

- You can find it in

many libraries

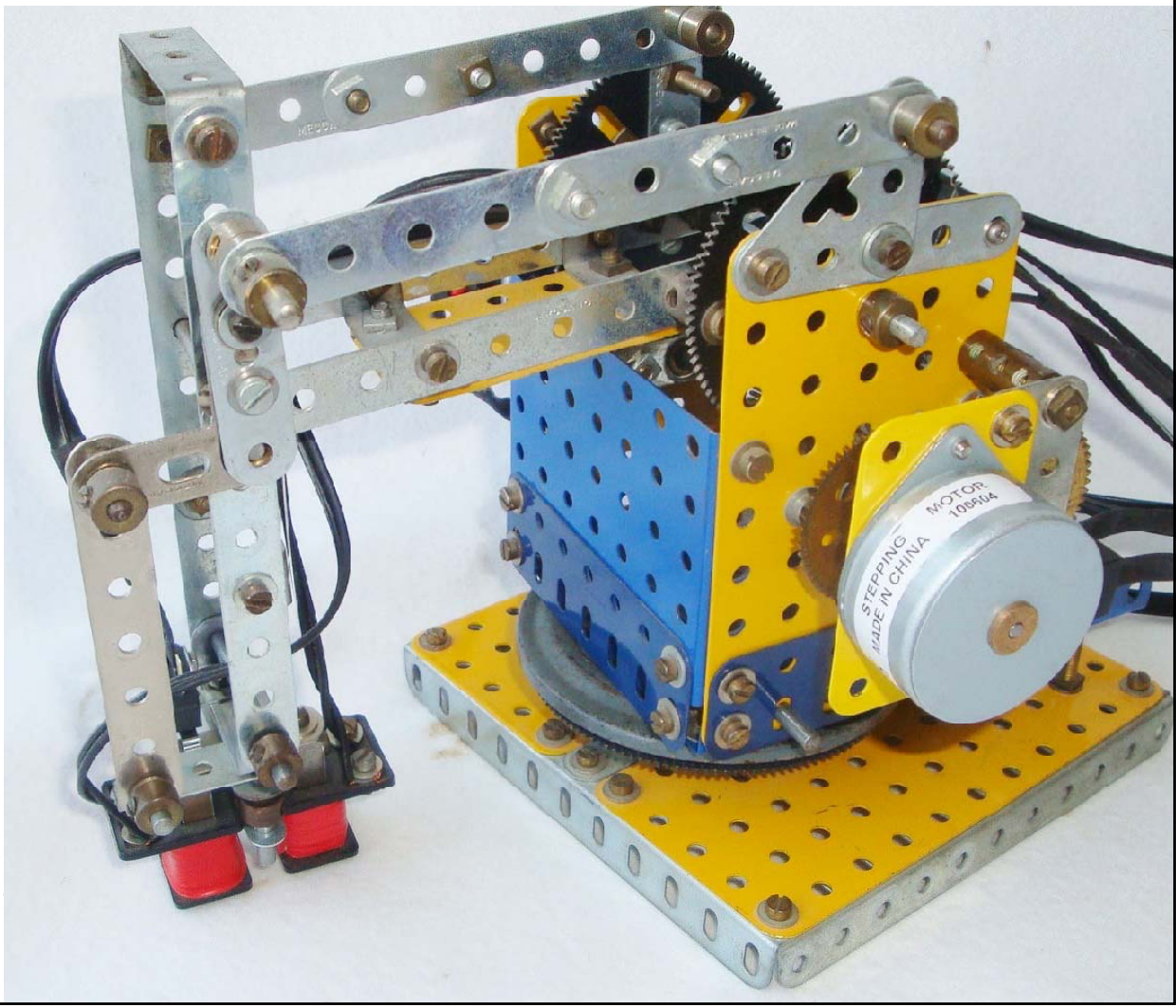

Mechanical Construction

Meccano

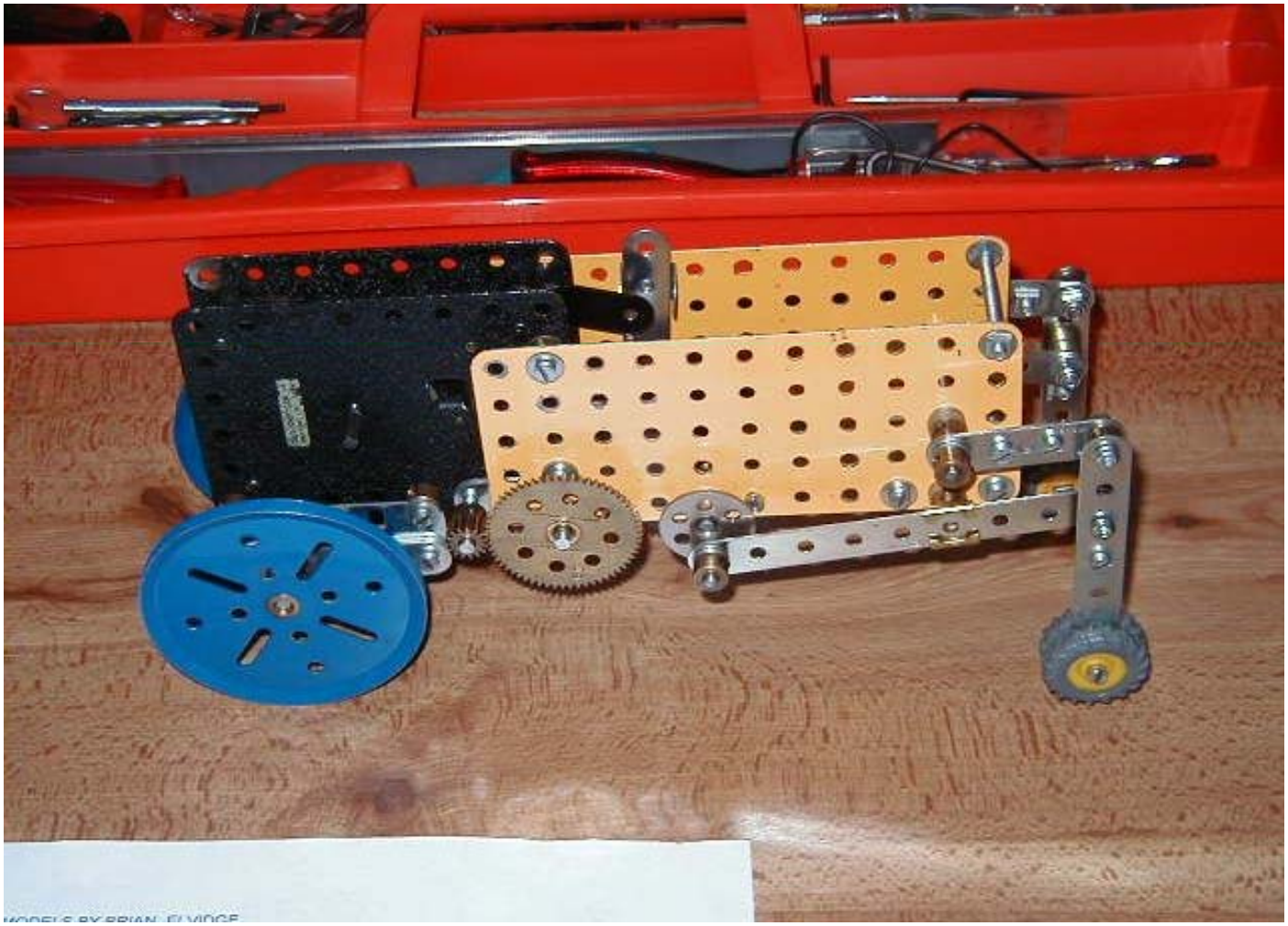

Mechanical construction

from scratch

Example : draw 2 independently driven wheels in the Back , and one freewheeling (castor or ball) .

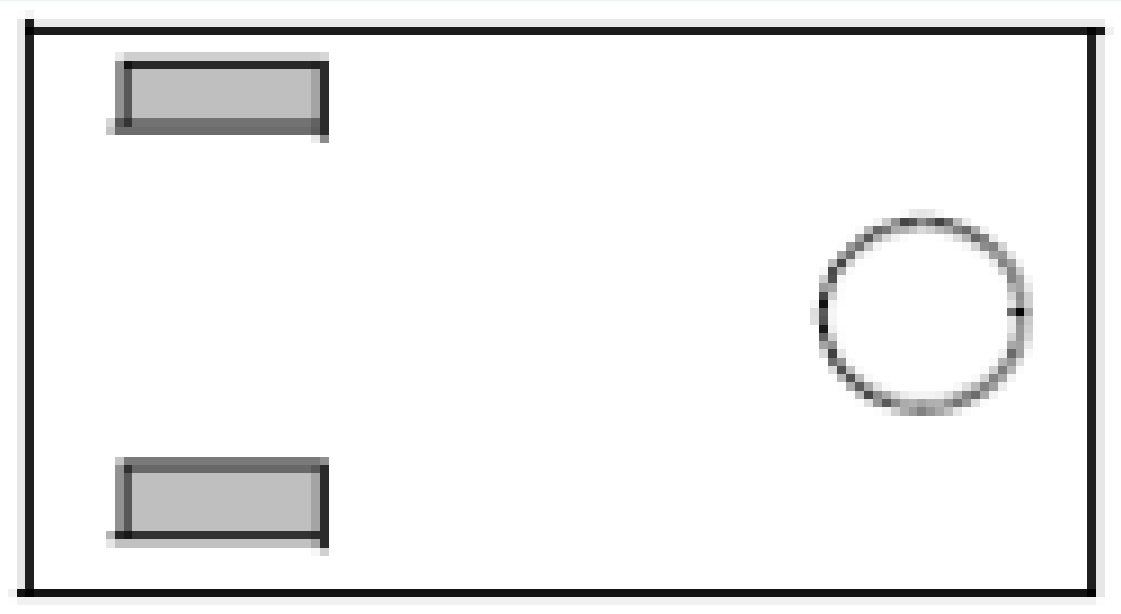

Solid works drawing

Shift to using it during the session

Battery Connections

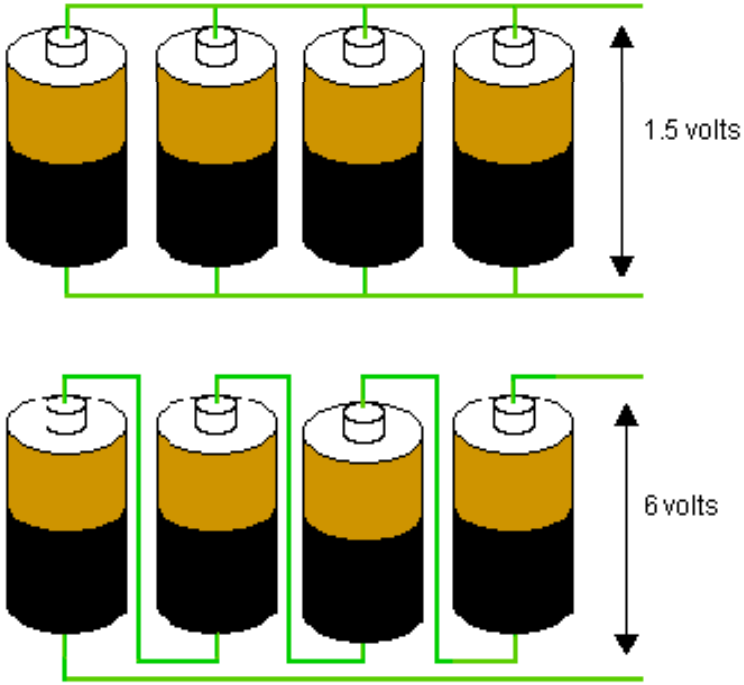

Series connection

- Get the sum of voltages of the batteries

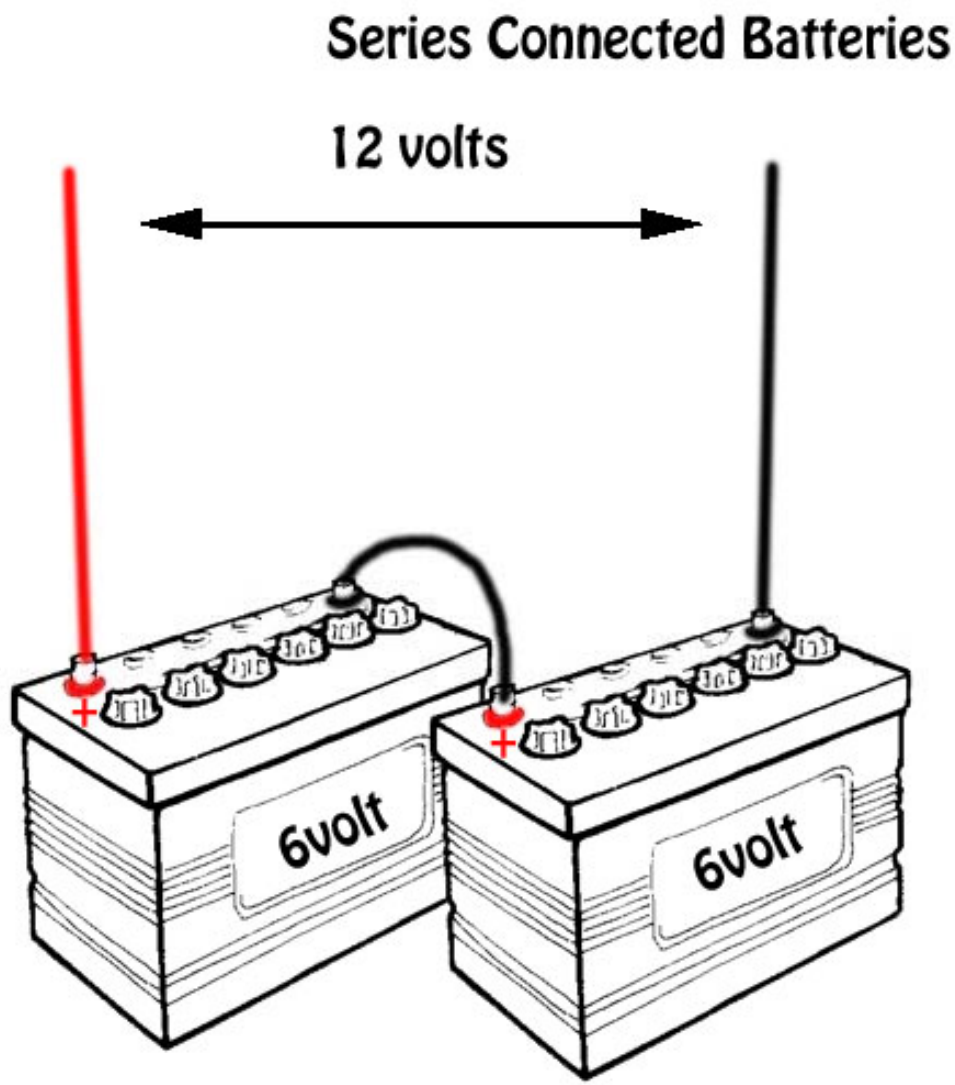

Parallel Connection

- Get the sum of current storage the batteries can give.

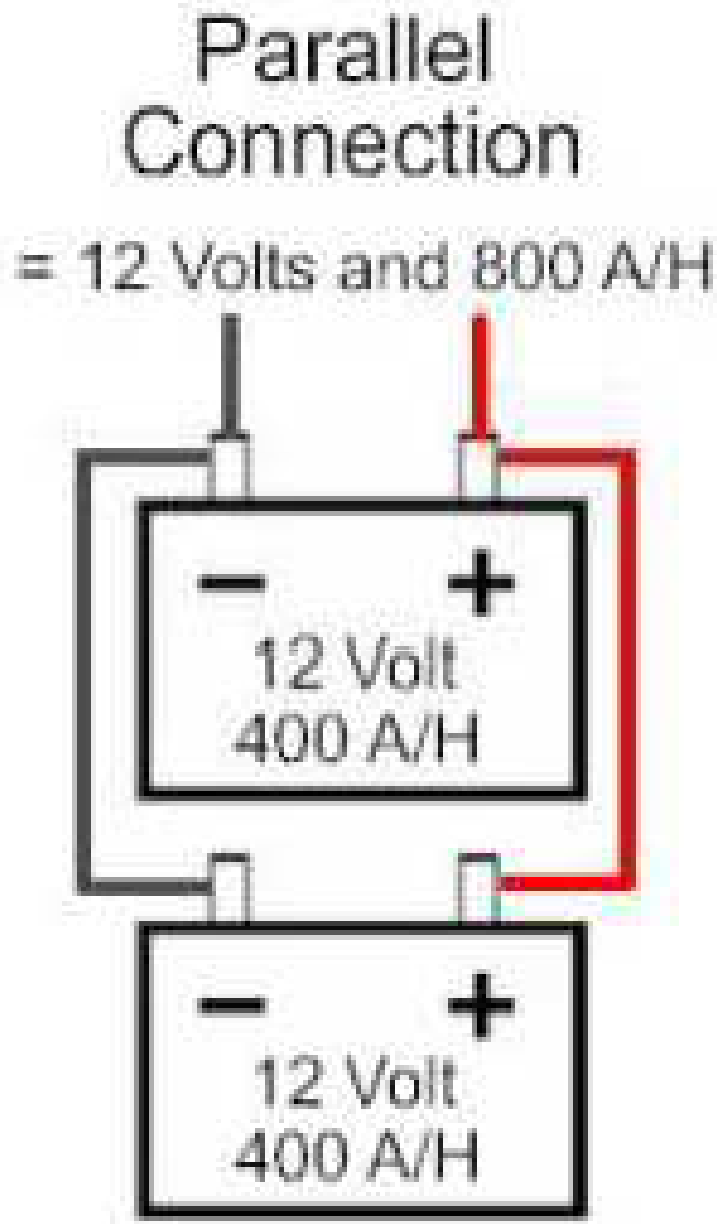

How the robot will move forward, backward and rotate ?

Case Study of our goal robot (Line follower)

Movement technique

Differential Drive

V_R is the right motor voltage

V_L is the left motor voltage.

Voltage	Polarity	Motion	Direction
$V_R=V_L$	+	Translational	Forward
$V_R>V_L$	+	Rotational	CCW
$V_R<V_L$	+	Rotational	CW
$V_R=V_L$	-	Translational	Backward
$V_R>V_L$	-	Rotational	CW
$V_R<V_L$	-	Rotational	CCW

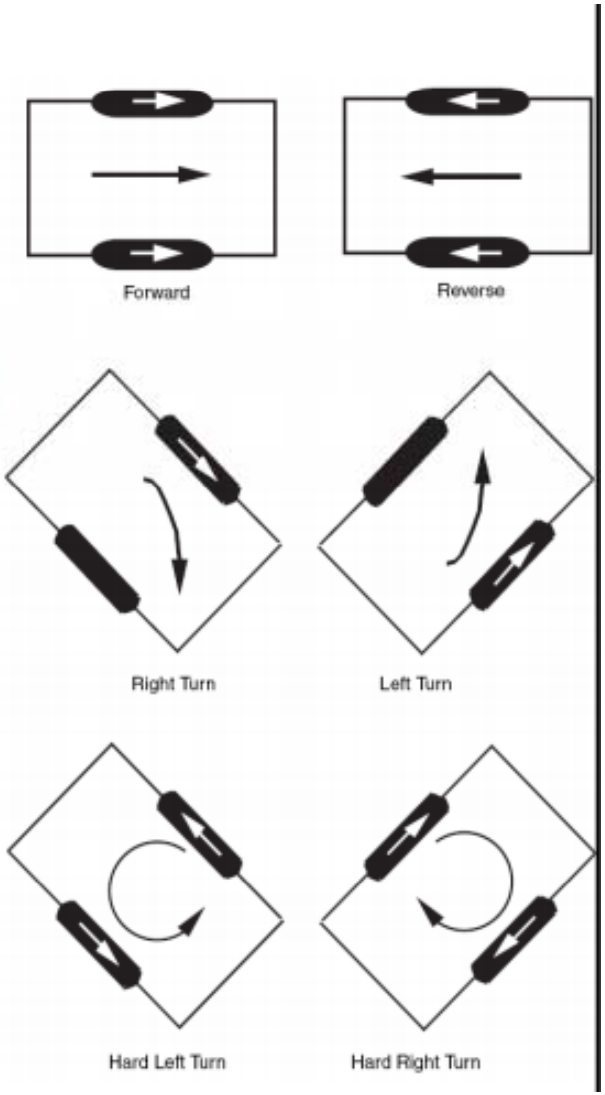

Experiment objective

- To know the connections of DC motor.
- To do many experiments with normal working.
- Controlling Dc motor with several techniques.
- Selecting preference for the motors.
- Driving DC motor techniques .

Motors

- DC motors connections and experiments
- Choose the right motor type ?

Connection/wiring diagram

- DC motor has 2 poles , +Ve and –VE .if it is connected parallel with the power source then the motor will turn clockwise , and vice versa .
- Some Dc motors has 3 connections (the extra one is for encoder (internal sensor)) .others have more for the sake of internal sensors too.
- But this is the direct connections, what about adding a switch to make kind of control
- The next step is to control the DC motor through microcontroller which we will do in the coming sessions .

Other motors

Servo motor

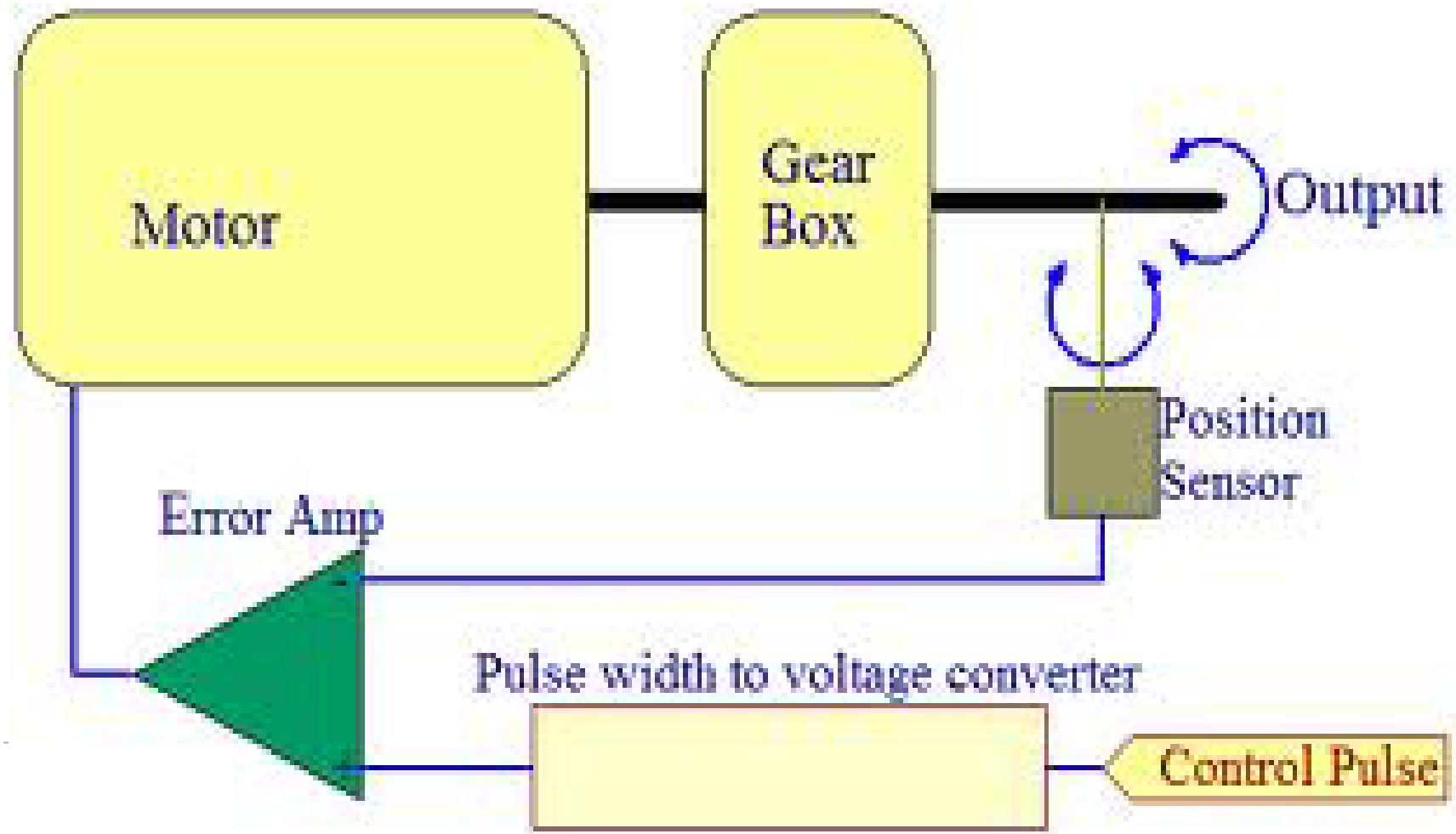

Other motors

Stepper motor

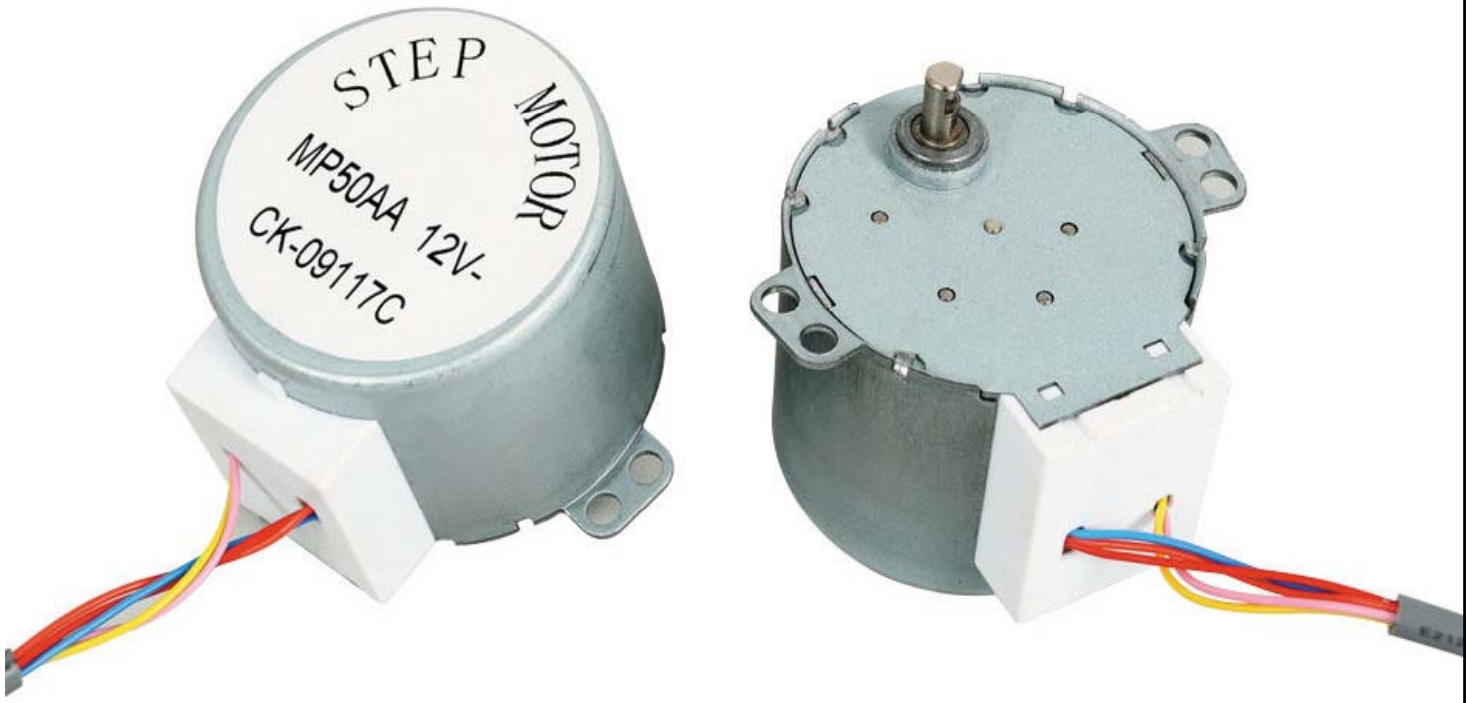

Other motors

Stepper motor

Other motors

Stepper motor

TEAC stepper motor
(TEAC 5.25" drive)

Brown (Coil 2 common)
Brown (Coil 1 common)
Yellow (Coil 1 phase 1)
Red (Coil 2 phase 1)
Blue (Coil 1 phase 2)
White (Coil 2 phase 2)

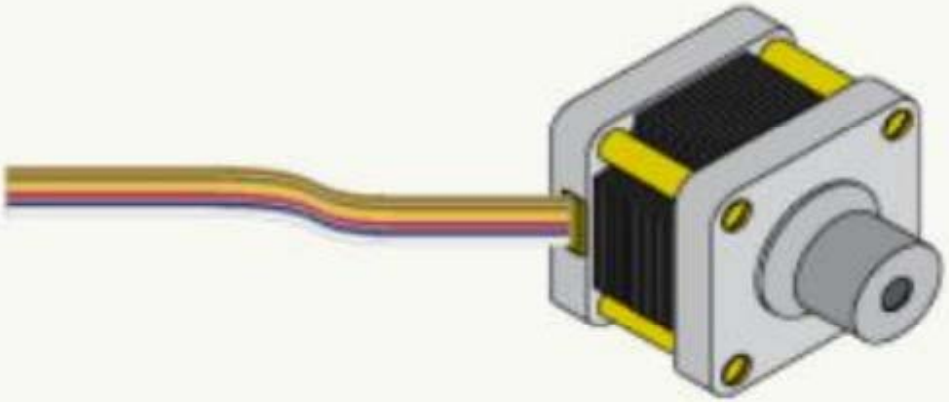

Drive Sequence Type

	Yellow	Red	Blue	White
1	HIGH	LOW	LOW	LOW
2	LOW	HIGH	LOW	LOW
3	LOW	LOW	HIGH	LOW
4	LOW	LOW	LOW	HIGH

Motor Selection

Motor Type	Pros	Cons
Continuous DC	-Wide selection available, both new and used. Easy to control via computer with relays or electronic switches. -With gearbox, larger DC motors can power a 200 pound robot.	-Requires gear reduction to provide torques needed for most robotic applications. -Poor standards in sizing and mounting arrangements.
Stepper	-Does not require gear reduction to power at low speeds. -Low cost when purchased on the surplus market. -Dynamic braking effect achieved by leaving coils of stepper motor energized (motor will not turn, but will lock in place).	-Poor performance under varying loads. Not great for robot locomotion over uneven surfaces. -Consumes high current. -Needs special driving circuit to provide stepping rotation.
Servo	-Least expensive non-surplus source for gear motors. -Can be used for precise angular control, or for continuous rotation (the latter requires modification). -Available in several standard sizes, with standard mounting holes.	-Requires modification for continuous rotation. -Requires special driving circuit. -Though more powerful servos are available, practical weight limit for powering a robot is about 10 pounds.

Motor Control

using

- Relay ,
- H-bridge ,
- Microcontroller

Relay

Is an Electromechanical switch it can control both AC and DC peripherals. It takes a DC signal that ignite the coil so it acts as an electro magnet and grab the arm to the other connection .

Relay

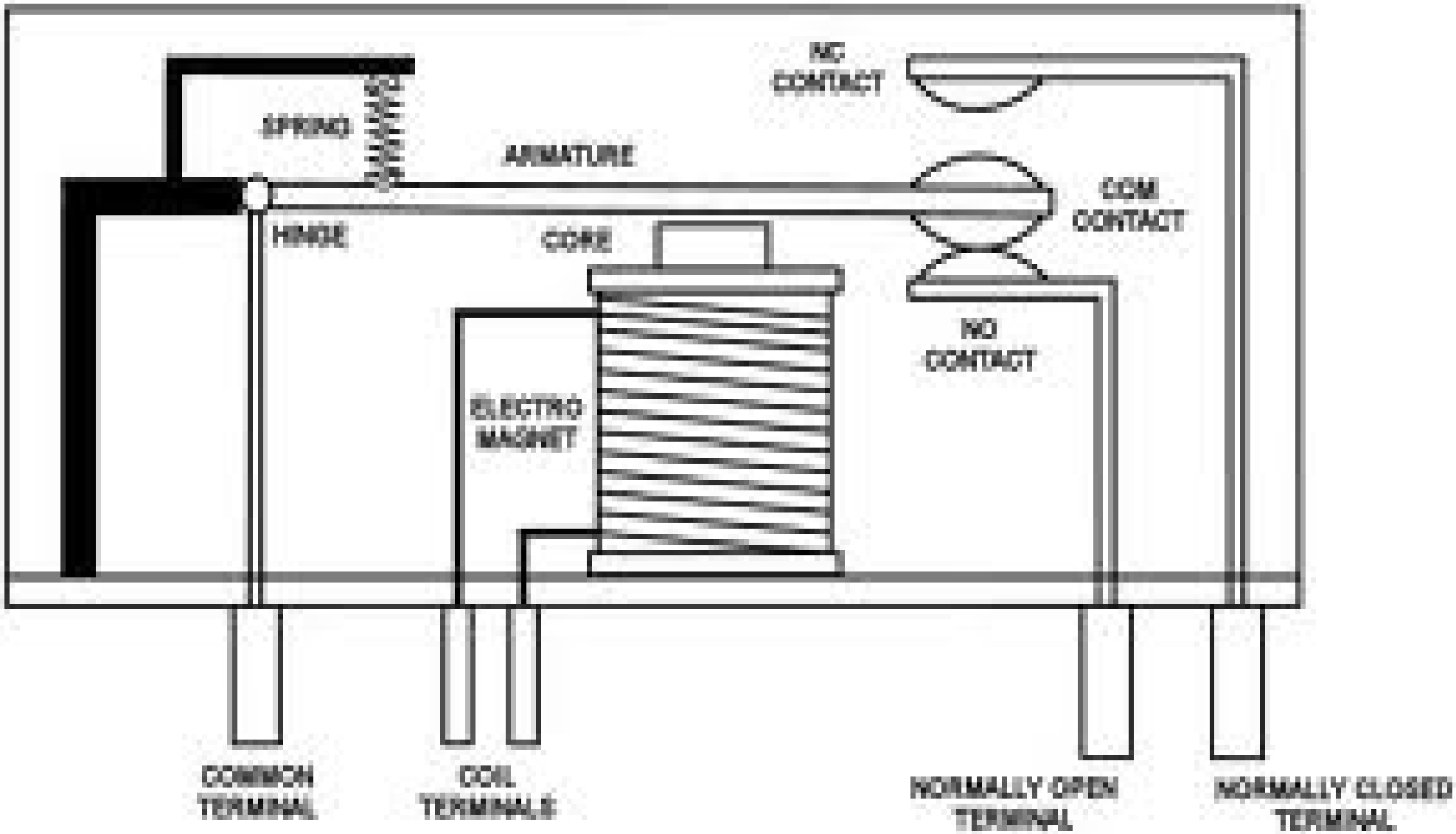
NC
CONTACT
SPRING
ARMATURE
COM
CONTACT
HINGE
CORE
NO
CONTACT
ELECTRO
MAGNET
COMMON
TERMINAL
COIL
TERMINALS
NORMALLY OPEN
TERMINAL
NORMALLY CLOSED
TERMINAL

Relay

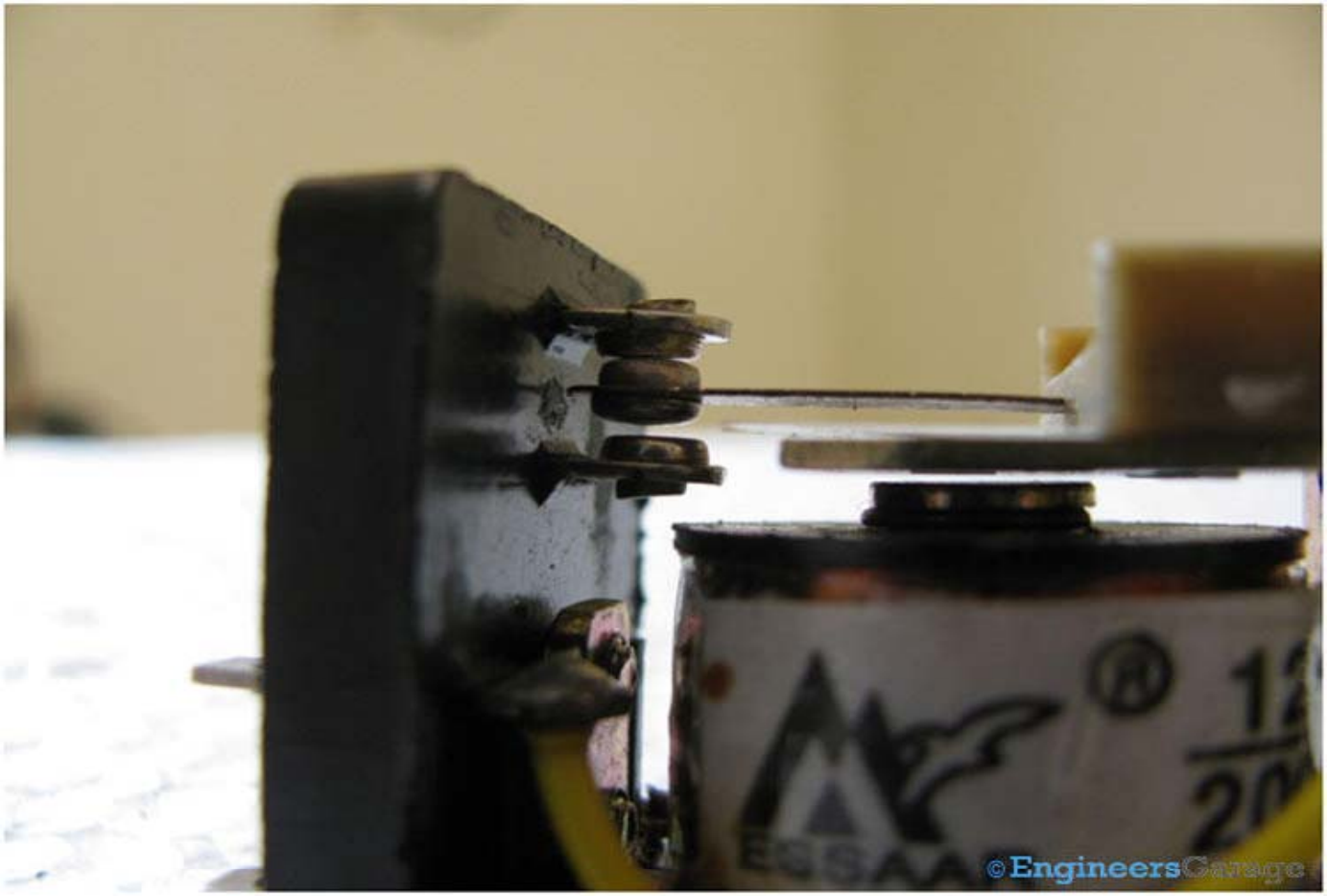

By default the relay is connected to one terminal called normally closed (N.C) terminal , when signal is sent the electromagnet grab the arm to the other contact (which is the normally opened terminal N.O)

Question ???

So can you tell me when we De magnetize(stop the DC signal) how can it return back to its original state?

Relay

- By making a fine Spring

Control the motor

Upon connecting the relay with the positive and negative terminal the current will pass switching on (closing the circuit) and the motor will rotate

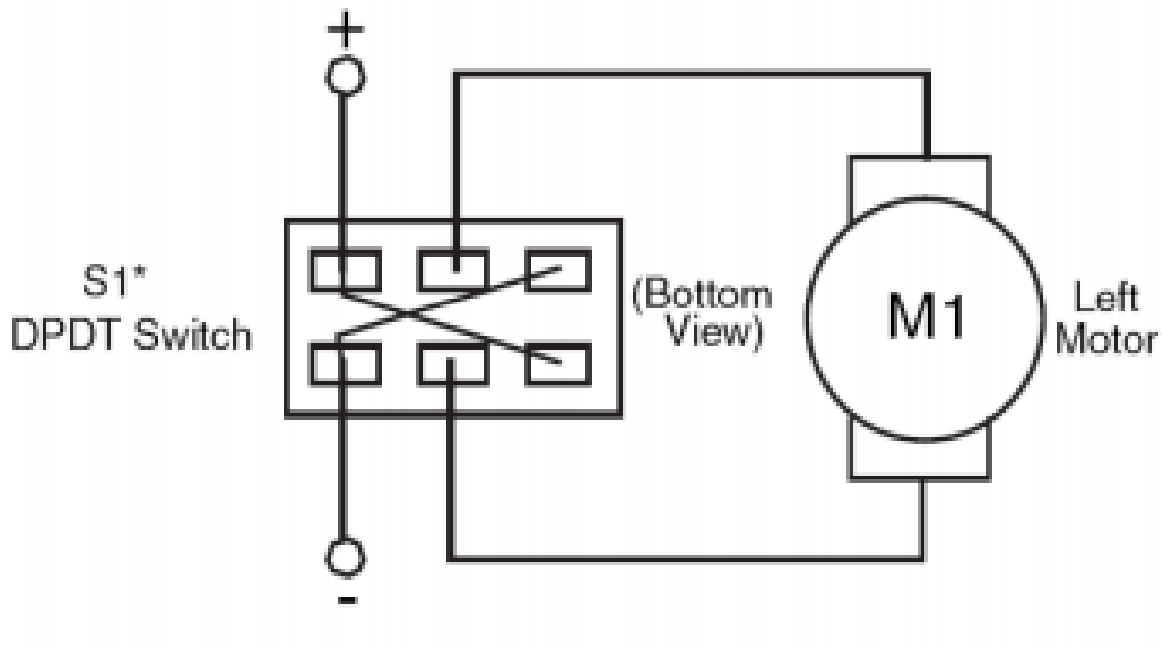

Question ???

While connecting the motor to switch how can I change its direction ?

H-bridge

- We will need a H-bridge circuit that can change direction of the motor without removing the leads from the motor or the Circuit

Video On H-bridge

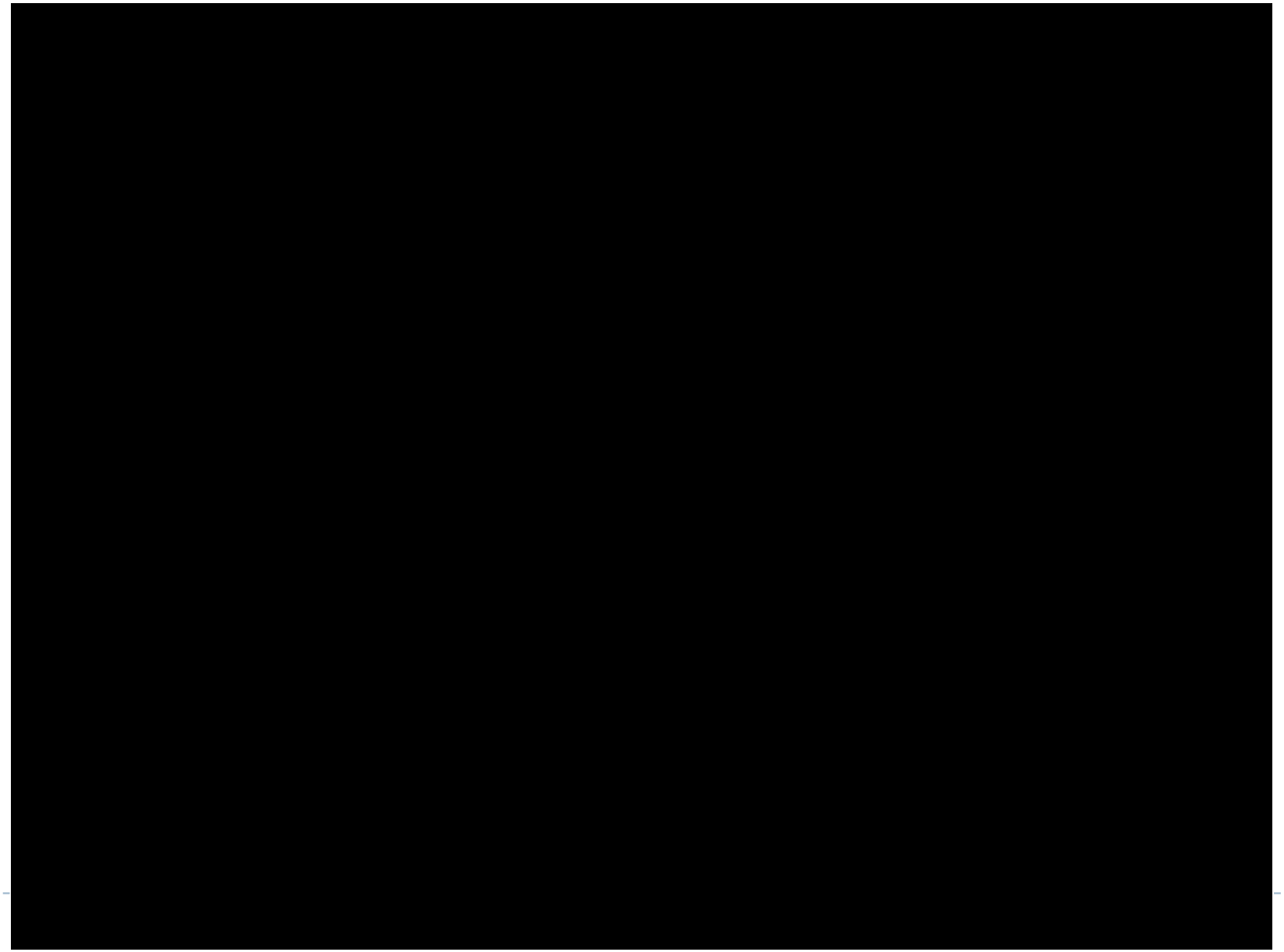

Motor control

H-bridge

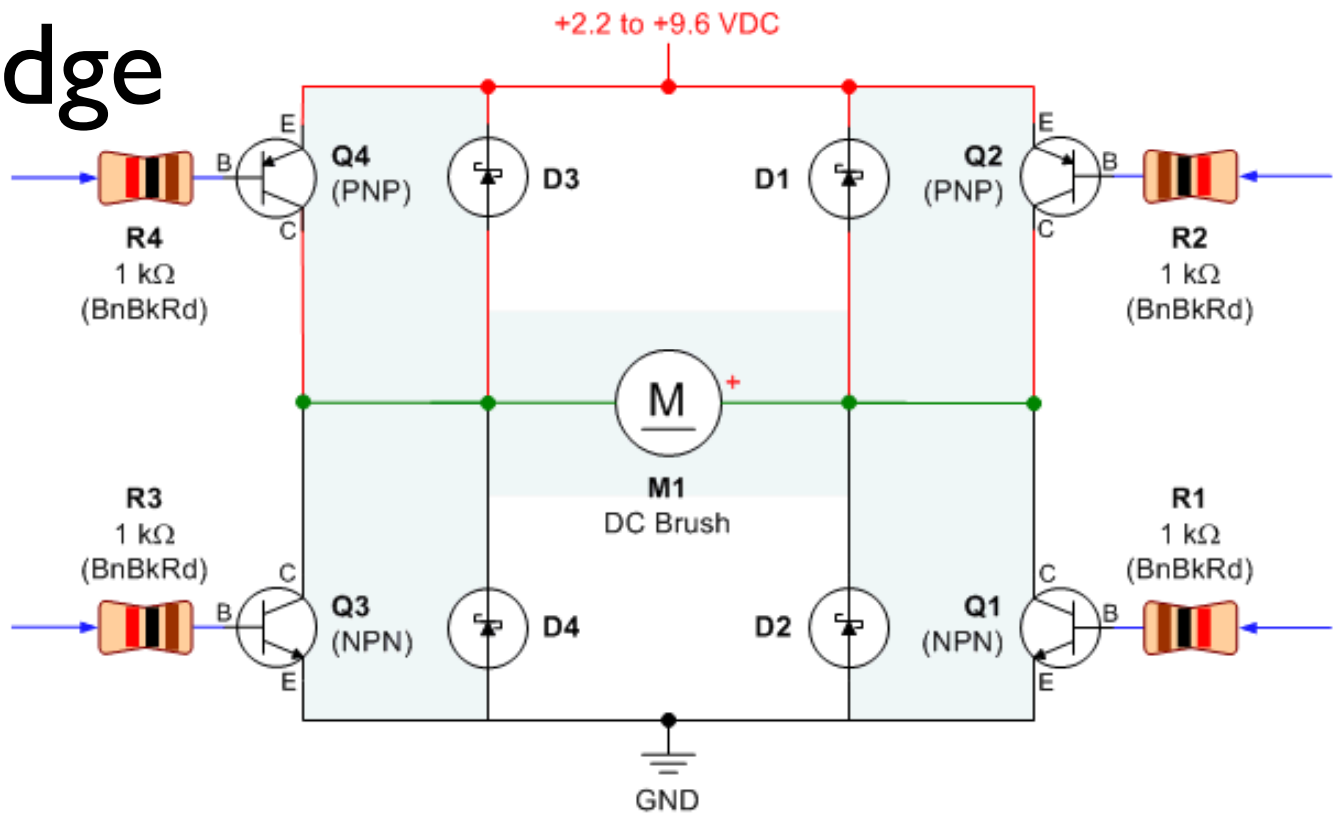

H-bridge

Why Are we using resistant ?

- *resistors* prevent too much current from passing through the base (B) control pin of the transistor

Question ???

Do you know the Diode?

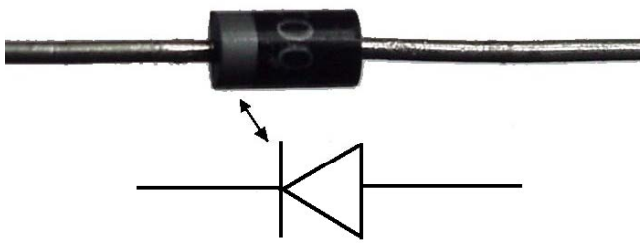

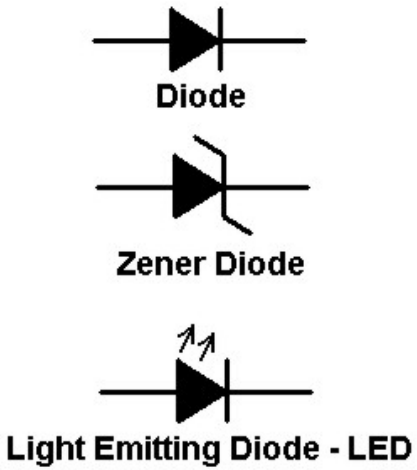

Why are we putting the diode ?

- Due to something called back-emf the motor is simply a coil so it stores energy even after shutting off electricity this electric energy go back to the source in a reverse direction it can have fatal error on the Motors performance so we should connect something like the diode which permit the passage of the current in one direction .

Back EMF in action

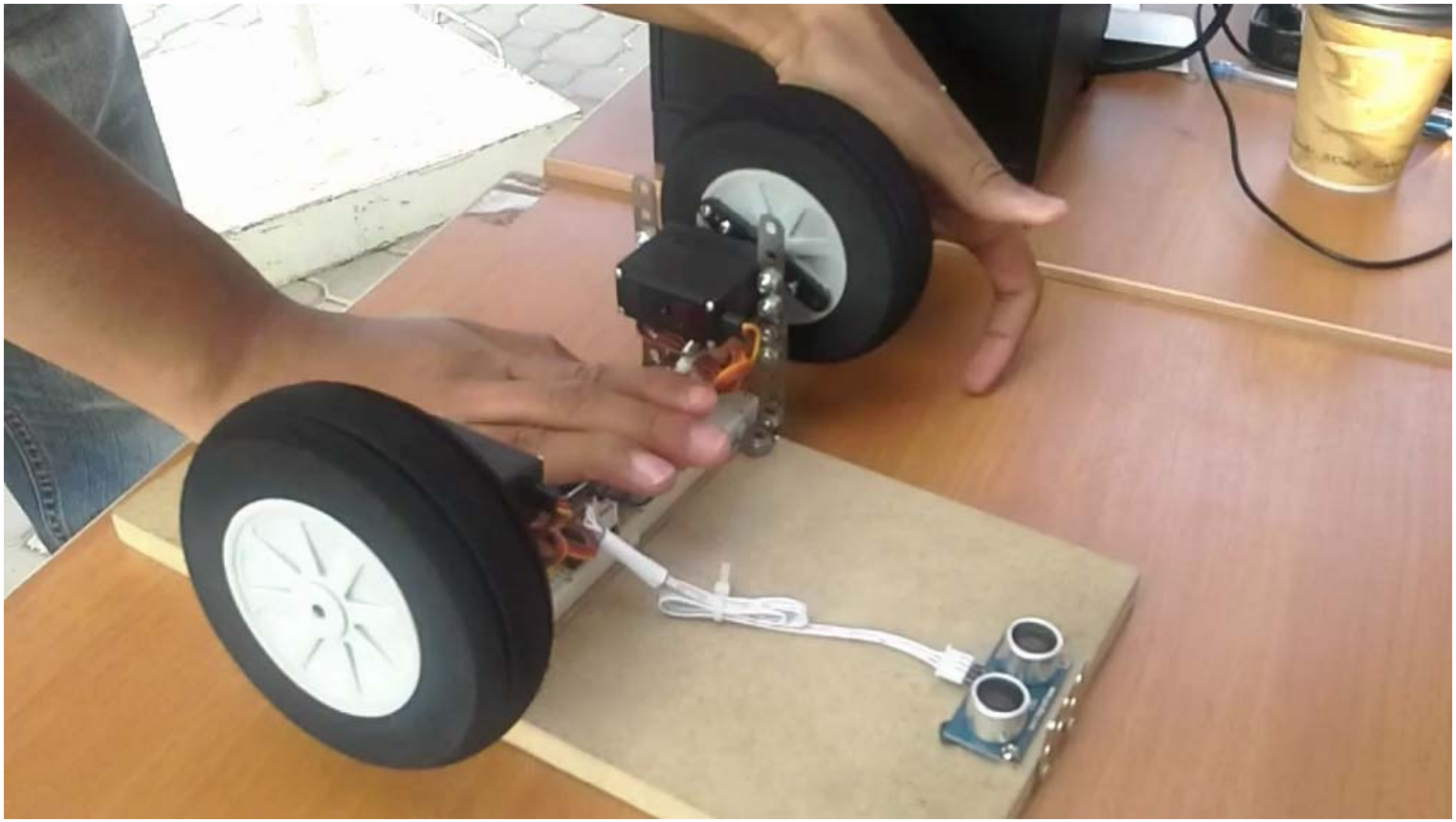

Block

Command	R1	R2	R3	R4
Coast/Roll/Off:	GND or disconnected	+VDC or disconnected	GND or disconnected	+VDC or disconnected
Forward:	GND or disconnected	GND	+VDC	+VDC or disconnected
Reverse:	+VDC	+VDC or disconnected	GND or disconnected	GND
Brake/Slow Down:	+VDC	+VDC or disconnected	+VDC	+VDC or disconnected

Shapes of H-bridge in the market

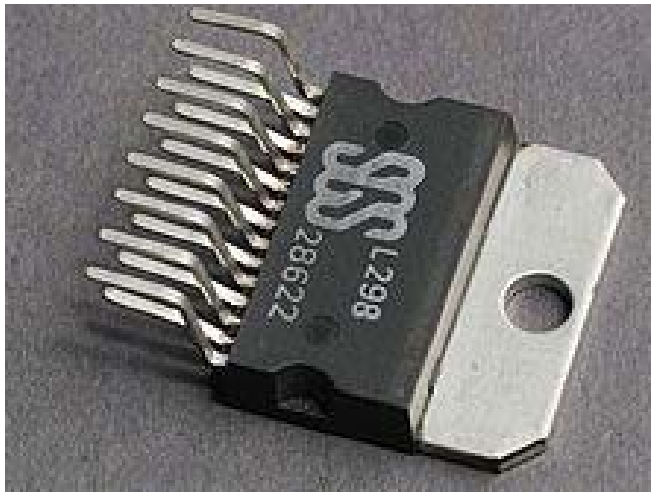

DIP

full circuit

Connection of one of H-bridges

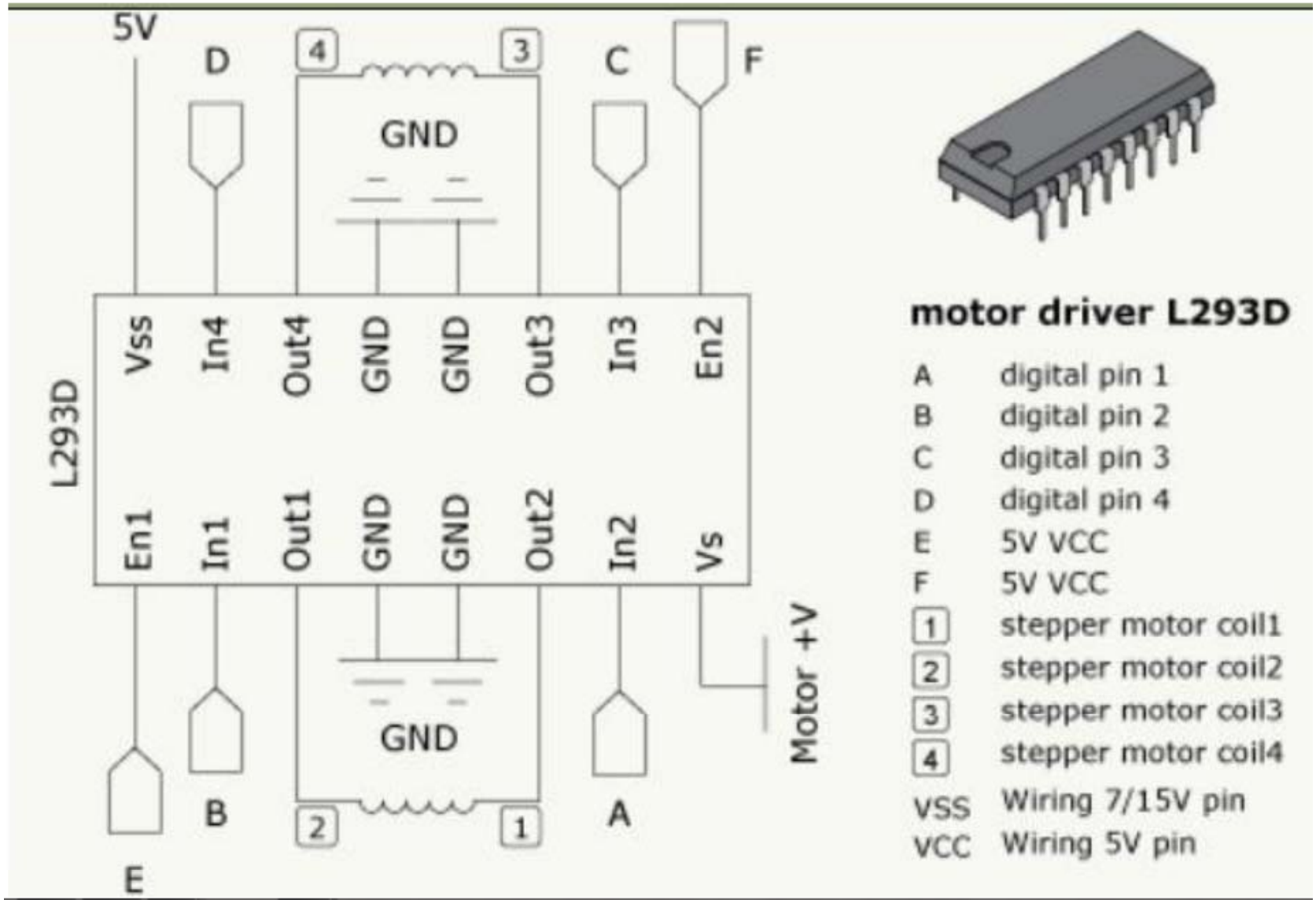

Question ???

What if I need to control not just the direction of the DC motor but the speed ?

Speed control of DC motor

PWM

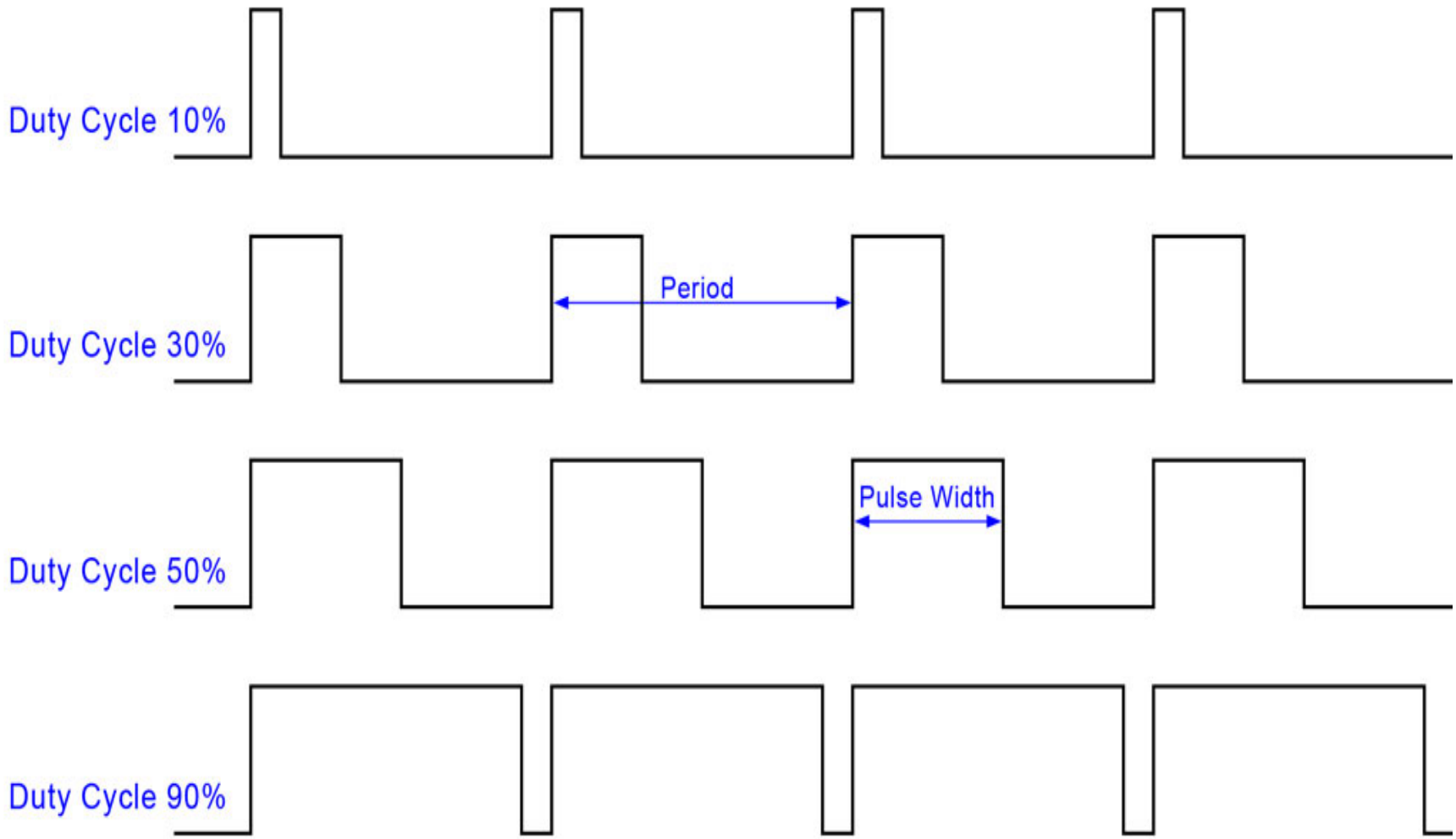

- Duty Cycle = Pulse Width x 100 / Period

Advanced (will be stated in details in next session)

PIC is the microcontroller or the brain of the robot

It gives signal in the form of 5 volts or 0 volts (digital High or Low)

So we will use its signal as a switching signal ….

This is on and off control what about speed control the DC motor

Changing the pulse width is giving varying voltage the min is zero and the maximum is according to the microcontroller or the power supply if using on off switching without MC

This is the Average voltage output

References

- Differential drive
- http://rossum.sourceforge.net/papers/DiffSteer/

- batteries
- http://www.societyofrobots.com/batteries.shtml
- motors
- http://pcbheaven.com/wikipages/How_DC_Motors_Work/

- Robot drawing on solid works
- http://www.solidworks.com/sw/education/robotic-design-resources-students.htm

- http://www.engineersgarage.com/insight/how-relay-switch-works
- http://electronics.howstuffworks.com/relay1.htm
- http://en.wikipedia.org/wiki/H_bridge
- http://www.robotroom.com/BipolarHBridge.html